Shp Aug 18

Work Order ID 72434

Monday, July 25, 2011 2:38:10 PM

Item ID: D4017-041 **Accept** **Setup Start**

Revision ID: **Stop**

Item Name: Short Basket Base Assembly (350)

Start Date: 7/25/2011 **Start Qty:** 1.00 **Cust Item ID:**

Required Date: 8/8/2011 **Req'd Qty:** 1.00 **Customer:**

Reference:

Approvals: **Process Plan:** _____ **Date:** 11-07-25 **Tooling:** _____ **Date:** _____ **Run Start**

QC: _____ **Date:** _____ **SPC (Y/N):** _____ **Date:** _____ **Stop**

Sequence ID/ Work Center ID	Operation Description	Set Up/ Run Hours	Tool ID	Tool #	Plan Code	Accept Qty	Reject Qty	Reject Number	Insp. Stamp
Draw Nbr	**Revision Nbr**								
D4017	C								
100	Weld per dwg A/R S.S. rod Batch: 1911578	0.00							
Large Fab	Large Fab								
Large Fab	**Memo**	0.00							
Large Fab	1- assemble ribs , weld as per dwg D4017 using DT9610B ***inspect before welding mesh*** 2- tack weld mesh on basket as per dwg D4017 and trim mesh to fit if necessary and trim to clear fasteners holes on the ends 3- weld hinge (3) and Mounting brackets as per dwg D4017 ***take lid to locate hinge and bracket***								
110	QC9- Inspect visual per QSI004- Fusion Welds	0.00							
QC	**Memo**	0.00							
Quality Control									

11.08.03

BE 11/08/03

11-08-03

Dart Aerospace Ltd

W/O:		WORK ORDER CHANGES					
DATE	STEP	PROCEDURE CHANGE	By	Date	Qty	Approval Chief Eng / Prod Mgr	Approval QC Inspector

Part No: _____ **PAR #:** _____ **Fault Category:** _____ **NCR:** Yes No **DQA:** _____ **Date:** _____

Resolution: _____ **Disposition:** _____ **QA: N/C Closed:** _____ **Date:** _____

NCR:		WORK ORDER NON-CONFORMANCE (NCR)						
DATE	STEP	Description of NC Section A	Corrective Action Section B			Verification Section C	Approval Chief Eng	Approval QC Inspector
			Initial Chief Eng	Action Description Chief Eng	Sign & Date			

NOTE: Date & initial all entries

H:\fFORMS\Quality Assurance\approved QA\NCRWO RevE

Work Order ID 72434

Monday, July 25, 2011 2:38:10 PM

Item ID: D4017-041 **Accept** **Setup Start**

Revision ID: **Stop**

Item Name: Short Basket Base Assembly (350)

Start Date: 7/25/2011 **Start Qty:** 1.00 **Cust Item ID:**

Required Date: 8/8/2011 **Req'd Qty:** 1.00 **Customer:**

Reference:

Run Start

Approvals: **Process Plan:** _____ **Date:** _____ **Tooling:** _____ **Date:** _____

Stop

QC: _____ **Date:** _____ **SPC (Y/N):** _____ **Date:** _____

Sequence ID/ Work Center ID	Operation Description	Set Up/ Run Hours	Tool ID	Tool #	Plan Code	Accept Qty	Reject Qty	Reject Number	Insp. Stamp
120	QC5- Inspect part completeness to step on W/O	0.00							
QC	**Memo**	0.00							
Quality Control									
125	Pressure Wash per QSI005 4.3	0.00							
HandFinish	**Memo**	0.00							
Hand Finishing									

Dart Aerospace Ltd

W/O:		WORK ORDER CHANGES					
DATE	STEP	PROCEDURE CHANGE	By	Date	Qty	Approval Chief Eng / Prod Mgr	Approval QC Inspector

Part No: _____ **PAR #:** _____ **Fault Category:** _____ **NCR:** Yes No **DQA:** _____ **Date:** _____

Resolution: _____ **Disposition:** _____ **QA: N/C Closed:** _____ **Date:** _____

NCR:		WORK ORDER NON-CONFORMANCE (NCR)						
DATE	STEP	Description of NC Section A	Corrective Action Section B			Verification Section C	Approval Chief Eng	Approval QC Inspector
			Initial Chief Eng	Action Description Chief Eng	Sign & Date			

NOTE: Date & initial all entries

H:\fFORMS\Quality Assurance\approved QA\NCRWO RevE

Work Order ID 72434

Monday, July 25, 2011 2:38:10 PM

Item ID: D4017-041 **Accept** **Setup Start** **Stop**

Revision ID:

Item Name: Short Basket Base Assembly (350)

Start Date: 7/25/2011 **Start Qty:** 1.00 **Cust Item ID:**

Required Date: 8/8/2011 **Req'd Qty:** 1.00 **Customer:**

Reference:

Run Start **Stop**

Approvals: **Process Plan:** _____ **Date:** _____ **Tooling:** _____ **Date:** _____

QC: _____ **Date:** _____ **SPC (Y/N):** _____ **Date:** _____

Sequence ID/ Work Center ID	Operation Description	Set Up/ Run Hours	Tool ID	Tool #	Plan Code	Accept Qty	Reject Qty	Reject Number	Insp. Stamp
130	White Gloss(Ref:4.3.5.2) per QSI005 4.3-Steel	0.00							
	RN 118439					1	ϕ		4/08/04
Powdercoat	**Memo**	0.00							
Powder Coating	1- Plug holes and mask only interior of hinge (3) prior to powder coat								
	1ST COAT: START TIME: 2:15pm OVEN TEMPERATURE: 400 °F FINISH TIME: 2:45pm ********** 2nd coat if necessary ********** 2ND COAT: START TIME: _____ OVEN TEMPERATURE: _____ FINISH TIME: _____								
140	QC3- Inspect Part Finish	0.00							
QC	**Memo**	0.00							
Quality Control									11/08/04

Dart Aerospace Ltd

W/O:		WORK ORDER CHANGES					
DATE	STEP	PROCEDURE CHANGE	By	Date	Qty	Approval Chief Eng / Prod Mgr	Approval QC Inspector

Part No: _____ **PAR #:** _____ **Fault Category:** _____ **NCR:** Yes No **DQA:** _____ **Date:** _____

Resolution: _____ **Disposition:** _____ **QA: N/C Closed:** _____ **Date:** _____

NCR:		WORK ORDER NON-CONFORMANCE (NCR)						
DATE	STEP	Description of NC Section A	Corrective Action Section B			Verification Section C	Approval Chief Eng	Approval QC Inspector
			Initial Chief Eng	Action Description Chief Eng	Sign & Date			

NOTE: Date & initial all entries

H:\fFORMS\Quality Assurance\approved QA\NCRWO RevE

Work Order ID 72434

Monday, July 25, 2011 2:38:10 PM

Item ID: D4017-041 **Accept** **Setup Start**

Revision ID: **Stop**

Item Name: Short Basket Base Assembly (350)

Start Date: 7/25/2011 **Start Qty:** 1.00 **Cust Item ID:**

Required Date: 8/8/2011 **Req'd Qty:** 1.00 **Customer:**

Reference:

Approvals: **Process Plan:** _____ **Date:** _____ **Tooling:** _____ **Date:** _____ **Run Start**

QC: _____ **Date:** _____ **SPC (Y/N):** _____ **Date:** _____ **Stop**

Sequence ID/ Work Center ID	Operation Description	Set Up/ Run Hours	Tool ID	Tool #	Plan Code	Accept Qty	Reject Qty	Reject Number	Insp. Stamp
150 HandFinish Hand Finishing	Assemble as per dwg	0.00				11/08/09			
	Memo	0.00							
160 QC Quality Control	QC5- Inspect part completeness to step on W/O	0.00							
	Memo	0.00							
170 Packaging Packaging	Identify as per dwg & Stock Location: GA	0.00				11/08/09			
	Memo W/O 72432	0.00							

Dart Aerospace Ltd

W/O:		WORK ORDER CHANGES					
DATE	STEP	PROCEDURE CHANGE	By	Date	Qty	Approval Chief Eng / Prod Mgr	Approval QC Inspector

Part No: _____ **PAR #:** _____ **Fault Category:** _____ **NCR:** Yes No **DQA:** _____ **Date:** _____

Resolution: _____ **Disposition:** _____ **QA: N/C Closed:** _____ **Date:** _____

NCR:		WORK ORDER NON-CONFORMANCE (NCR)						
DATE	STEP	Description of NC Section A	Corrective Action Section B			Verification Section C	Approval Chief Eng	Approval QC Inspector
			Initial Chief Eng	Action Description Chief Eng	Sign & Date			

NOTE: Date & initial all entries

H:\fFORMS\Quality Assurance\approved QA\NCRWO RevE

Work Order ID 72434

Monday, July 25, 2011 2:38:10 PM

Item ID: D4017-041 **Accept** **Setup Start** **Stop**

Revision ID:

Item Name: Short Basket Base Assembly (350)

Start Date: 7/25/2011 **Start Qty:** 1.00 **Cust Item ID:**

Required Date: 8/8/2011 **Req'd Qty:** 1.00 **Customer:**

Reference:

Run Start **Stop**

Approvals: **Process Plan:** _____ **Date:** _____ **Tooling:** _____ **Date:** _____

QC: _____ **Date:** _____ **SPC (Y/N):** _____ **Date:** _____

Sequence ID/ Work Center ID	Operation Description	Set Up/ Run Hours	Tool ID	Tool #	Plan Code	Accept Qty	Reject Qty	Reject Number	Insp. Stamp
180	QC21- Final Inspection - Work Order Release	0.00				CK 11/08/10			
QC Quality Control	**Memo**	0.00							

11-08-9

Dart Aerospace Ltd

W/O:		WORK ORDER CHANGES					
DATE	STEP	PROCEDURE CHANGE	By	Date	Qty	Approval Chief Eng / Prod Mgr	Approval QC Inspector

Part No: _____ **PAR #:** _____ **Fault Category:** _____ **NCR:** Yes No **DQA:** _____ **Date:** _____

Resolution: _____ **Disposition:** _____ **QA: N/C Closed:** _____ **Date:** _____

NCR:		WORK ORDER NON-CONFORMANCE (NCR)						
DATE	STEP	Description of NC Section A	Corrective Action Section B			Verification Section C	Approval Chief Eng	Approval QC Inspector
			Initial Chief Eng	Action Description Chief Eng	Sign & Date			

NOTE: Date & initial all entries

Picklist Print

Monday, July 25, 2011 2:38:17 PM

7

Work Order ID: 72434

Parent Item: D4017-041

Parent Item Name: Short Basket Base Assembly (350)

Start Date: 7/25/2011 **Required Date:** 8/8/2011

Start Qty: 1.00 **Required Qty:** 1.00

Comments: IPP RevA: new issue DD 09.11.30 verified by:EC IPP Rev:B as per dwg RevA DD 10.03.06 verified by:EC IPP Rev:C as per dwg RevB DD 10.04.16 verified by:EC IPP Rev:D as per dwg revC DD 10.08.18 verified by:EC IPP Rev:E 10.11.04 added pressure wash DD verf:EC

Component Item ID/ Item Name	Replacement Item ID	Mfg/ Purch	Bin Item	Primary Location	Last Location	Route Seq ID	Unit of Measure	Qty on Hand	Qty per Kit	Total Qty	Qty Issued	Date Issued	Status
D4017-1		Manufactured	No			100	Each	6.0000	1	1			
Rib				68394						11.07.28			

Location		Loc Qty	Loc Code
WA		3	
	59957	0	
	71993	3	
WA006		3	
	68394	1	
	68481	2	

D4018-1		Manufactured	No				Each	4.0000		1			
Rib										11.07.28			

Location		Loc Qty	Loc Code
WA		4	
	71992	1	
	71996	3	

B66475

D4018-1 is the same as D4017-3

D4017-5		Manufactured	No			100	Each	4.0000	1	1			
Hinge Rib										11.07.28			

Location		Loc Qty	Loc Code
WA		4	
	68480	1	
	71106	3	

Dart Aerospace Ltd

W/O:		WORK ORDER CHANGES					
DATE	STEP	PROCEDURE CHANGE	By	Date	Qty	Approval Chief Eng / Prod Mgr	Approval QC Inspector

Part No: _____ **PAR #:** _____ **Fault Category:** _____ **NCR:** Yes No **DQA:** _____ **Date:** _____

Resolution: _____ **Disposition:** _____ **QA: N/C Closed:** _____ **Date:** _____

NCR:		WORK ORDER NON-CONFORMANCE (NCR)						
DATE	STEP	Description of NC Section A	Corrective Action Section B			Verification Section C	Approval Chief Eng	Approval QC Inspector
			Initial Chief Eng	Action Description Chief Eng	Sign & Date			

NOTE: Date & initial all entries

H:\fFORMS\Quality Assurance\approved QA\NCRWO RevE

Picklist Print

Monday, July 25, 2011 2:38:17 PM

7

Work Order ID: 72434

Parent Item: D4017-041

Parent Item Name: Short Basket Base Assembly (350)

Start Date: 7/25/2011 **Required Date:** 8/8/2011

Start Qty: 1.00 **Required Qty:** 1.00

D4017-7 Rib	Manufactured	No	100	Each	6.0000	1	1	11.07.28

72008 (1)

Location	Loc Qty	Loc Code
WA	3	
69730	1	
71944	2	
WA005	3	
72008	3	

D4017-9 Rib	Manufactured	No	100	Each	12.0000	2	2	11.07.28

72007 (2)

Location	Loc Qty	Loc Code
WA	6	
70341	2	
71742	4	
WA006	6	
72007	6	

D3916-041 Rib Assembly	Manufactured	No	100	Each	4.0000	2	2	11.07.28

71994 (2)

Location	Loc Qty	Loc Code
WA	4	
69161	2	
71282	2	

Dart Aerospace Ltd

W/O:		WORK ORDER CHANGES					
DATE	STEP	PROCEDURE CHANGE	By	Date	Qty	Approval Chief Eng / Prod Mgr	Approval QC Inspector

Part No: _____ **PAR #:** _____ **Fault Category:** _____ **NCR:** Yes No **DQA:** _____ **Date:** _____

Resolution: _____ **Disposition:** _____ **QA: N/C Closed:** _____ **Date:** _____

NCR:		WORK ORDER NON-CONFORMANCE (NCR)						
DATE	STEP	Description of NC Section A	Corrective Action Section B			Verification Section C	Approval Chief Eng	Approval QC Inspector
			Initial Chief Eng	Action Description Chief Eng	Sign & Date			

NOTE: Date & initial all entries

Picklist Print

Monday, July 25, 2011 2:38:17 PM

7

Work Order ID: 72434

Parent Item: D4017-041

Parent Item Name: Short Basket Base Assembly (350)

Start Date: 7/25/2011 **Required Date:** 8/8/2011

Start Qty: 1.00 **Required Qty:** 1.00

D3916-5 Light Rib	Manufactured	No	100	Each	16.0000	1	1	11.07.28

Location	Loc Qty	Loc Code
WA	16	
59088	3	
69076	4	
71938	9	1

D4034-041 Aft Upper Rib Assembly	Manufactured	No	100	Each	6.0000	1	1	11.07.28

Location	Loc Qty	Loc Code
WA	5	
71483	2	
71972	3	1
WA006	1	
69157	1	

D4034-043 Fwd Upper Rib Assembly	Manufactured	No	100	Each	3.0000	1	1	11.07.28

72490 1

Location	Loc Qty	Loc Code
WA	2	
71955	2	
WA006	1	
70241	1	

Dart Aerospace Ltd

W/O:		WORK ORDER CHANGES					
DATE	STEP	PROCEDURE CHANGE	By	Date	Qty	Approval Chief Eng / Prod Mgr	Approval QC Inspector

Part No: _____ **PAR #:** _____ **Fault Category:** _____ **NCR:** Yes No **DQA:** _____ **Date:** _____

Resolution: _____ **Disposition:** _____ **QA: N/C Closed:** _____ **Date:** _____

NCR:		WORK ORDER NON-CONFORMANCE (NCR)						
DATE	STEP	Description of NC Section A	Corrective Action Section B			Verification Section C	Approval Chief Eng	Approval QC Inspector
			Initial Chief Eng	Action Description Chief Eng	Sign & Date			

NOTE: Date & initial all entries

H:\fFORMS\Quality Assurance\approved QA\NCRWO RevE

Picklist Print

Monday, July 25, 2011 2:38:17 PM

7.

Work Order ID: 72434

Parent Item: D4017-041

Parent Item Name: Short Basket Base Assembly (350)

Start Date: 7/25/2011 **Required Date:** 8/8/2011

Start Qty: 1.00 **Required Qty:** 1.00

D2581 Mounting Bracket	Manufactured	No	100	Each	63.0000	2	2	11.07.28

Location	Loc Qty	Loc Code
WA	63	
69258	28	
69739	2	
70766	33	2

D3913-15 Wide Handle Plate	Manufactured	No	100	Each	7.0000	1	1	11.07.28

Location	Loc Qty	Loc Code
WA	6	
69158	2	1
69647	4	
WA005	1	
69012	1	

D4016-1 Hinge Half, Base	Manufactured	No	100	Each	13.0000	3	3	11.07.28

Location	Loc Qty	Loc Code
WA	13	
66418	0	
68426	3	
70342	10	3

D4020-3 Mesh (350 Basket Short, Base)	Manufactured	No	100	Each	0.0000	1	1	11.08.02 B72435

Dart Aerospace Ltd

W/O:		WORK ORDER CHANGES					
DATE	STEP	PROCEDURE CHANGE	By	Date	Qty	Approval Chief Eng / Prod Mgr	Approval QC Inspector

Part No: _____ **PAR #:** _____ **Fault Category:** _____ **NCR:** Yes No **DQA:** _____ **Date:** _____

Resolution: _____ **Disposition:** _____ **QA: N/C Closed:** _____ **Date:** _____

NCR:		WORK ORDER NON-CONFORMANCE (NCR)						
DATE	STEP	Description of NC Section A	Corrective Action Section B			Verification Section C	Approval Chief Eng	Approval QC Inspector
			Initial Chief Eng	Action Description Chief Eng	Sign & Date			

NOTE: Date & initial all entries

H:\fFORMS\Quality Assurance\approved QA\NCRWO RevE

Picklist Print

Monday, July 25, 2011 2:38:17 PM

7.

Work Order ID: 72434

Parent Item: D4017-041

Parent Item Name: Short Basket Base Assembly (350)

Start Date: 7/25/2011 **Required Date:** 8/8/2011

Start Qty: 1.00 **Required Qty:** 1.00

D4020-11 End Mesh, Basket	Manufactured	No	100	Each	6.0000	2	2	11.08.03

Location	Loc Qty	Loc Code	
WA	6		
69648	2		
71725	4		2

D4021-1 Handle Plate	Manufactured	No	100	Each	33.0000	3	3	11.07.28

Location	Loc Qty	Loc Code	
WA	33		
69518	6		
69777	27		3

D2931 Bumper	Manufactured	No	150	Each	614.0000	2	2	11/08/09

Location	Loc Qty	Loc Code	
ST504	614		
46064	614		2

D4021-5 Blanking Plate	Manufactured	No	150	Each	10.0000	2	2	11/08/09

Location	Loc Qty	Loc Code	
GA	8		
70349	8		
WA005	2		
67008	2		2

Dart Aerospace Ltd

W/O:		WORK ORDER CHANGES					
DATE	STEP	PROCEDURE CHANGE	By	Date	Qty	Approval Chief Eng / Prod Mgr	Approval QC Inspector

Part No: _____ **PAR #:** _____ **Fault Category:** _____ **NCR:** Yes No **DQA:** _____ **Date:** _____

Resolution: _____ **Disposition:** _____ **QA: N/C Closed:** _____ **Date:** _____

NCR:		WORK ORDER NON-CONFORMANCE (NCR)						
DATE	STEP	Description of NC Section A	Corrective Action Section B			Verification Section C	Approval Chief Eng	Approval QC Inspector
			Initial Chief Eng	Action Description Chief Eng	Sign & Date			

NOTE: Date & initial all entries

H:\fFORMS\Quality Assurance\approved QA\NCRWO RevE

Picklist Print

Monday, July 25, 2011 2:38:17 PM

Work Order ID: 72434

Parent Item: D4017-041

Parent Item Name: Short Basket Base Assembly (350)

Start Date: 7/25/2011 **Required Date:** 8/8/2011

Start Qty: 1.00 **Required Qty:** 1.00

AN3-10A Bolt		Purchased	No	150	Each	127.0000	6	6	11/08/09

Location	Loc Qty	Loc Code
ST351	127	
117313	11	
117795	116	6

AN960JD8 Washer	NAS1149DN832J	Purchased	No	150	Each	0.0000	2	2	11/08/09
MS20600-AD4W3 Cherry Rivets		Purchased	No	150	Each	845.0000	2	2	11/08/09

4 M1173/6 (2x)

Location	Loc Qty	Loc Code
ST321	712	
111636	112	
117505	452	2
117601	148	
WA018	133	
107939	133	

MS21042L3 Nut		Purchased	No	150	Each	1,389.000	6	6	11/08/09

Location	Loc Qty	Loc Code
ST300	1389	
117441	629	
117601	400	
117885	360	6

Dart Aerospace Ltd

W/O:		WORK ORDER CHANGES					
DATE	STEP	PROCEDURE CHANGE	By	Date	Qty	Approval Chief Eng / Prod Mgr	Approval QC Inspector

Part No: _____ **PAR #:** _____ **Fault Category:** _____ **NCR:** Yes No **DQA:** _____ **Date:** _____

Resolution: _____ **Disposition:** _____ **QA: N/C Closed:** _____ **Date:** _____

NCR:		WORK ORDER NON-CONFORMANCE (NCR)						
DATE	STEP	Description of NC Section A	Corrective Action Section B			Verification Section C	Approval Chief Eng	Approval QC Inspector
			Initial Chief Eng	Action Description Chief Eng	Sign & Date			

NOTE: Date & initial all entries

Picklist Print

Monday, July 25, 2011 2:38:17 PM

7.

Work Order ID: 72434

Parent Item: D4017-041

Parent Item Name: Short Basket Base Assembly (350)

Start Date: 7/25/2011 **Required Date:** 8/8/2011

Start Qty: 1.00 **Required Qty:** 1.00

NAS1149F0332P WASHER	Purchased	No	150	Each	276.0000	12	12	11/08/09

Location	Loc Qty	Loc Code
ST275	276	
117735	87	
118354	186	12
17317	3	

Dart Aerospace Ltd

W/O:		WORK ORDER CHANGES					
DATE	STEP	PROCEDURE CHANGE	By	Date	Qty	Approval Chief Eng / Prod Mgr	Approval QC Inspector

Part No: _____ **PAR #:** _____ **Fault Category:** _____ **NCR:** Yes No **DQA:** _____ **Date:** _____

Resolution: _____ **Disposition:** _____ **QA: N/C Closed:** _____ **Date:** _____

NCR:		WORK ORDER NON-CONFORMANCE (NCR)						
DATE	STEP	Description of NC Section A	Corrective Action Section B			Verification Section C	Approval Chief Eng	Approval QC Inspector
			Initial Chief Eng	Action Description Chief Eng	Sign & Date			

NOTE: Date & initial all entries

H:\fFORMS\Quality Assurance\approved QA\NCRWO RevE

ITEM	QTY -041	P/N	DESCRIPTION
	X	D4017-041	SHORT BASKET BASE ASSY (350)
1	1	D4017-101	TUBULAR ASSY (350 SHORT BASKET)
2	2	D2581	MOUNTING BRACKET
3	2	D2931	BUMPER
4	1	D3913-15	WIDE HANDLE PLATE
5	3	D4016-1	HINGE HALF, BASE
6	1	D4020-3	MESH (350 BASKET SHORT BASE)
7	2	D4020-11	END MESH, BASKET
8	3	D4021-1	HANDLE PLATE
9	2	D4021-5	BLANKING PLATE
10	6	AN3-10A	BOLT
11	2	AN960JD8	WASHER
12	2	MS20600AD4W3	RIVET
13	6	MS21042L3	NUT
14	12	NAS1149F0332P	WASHER

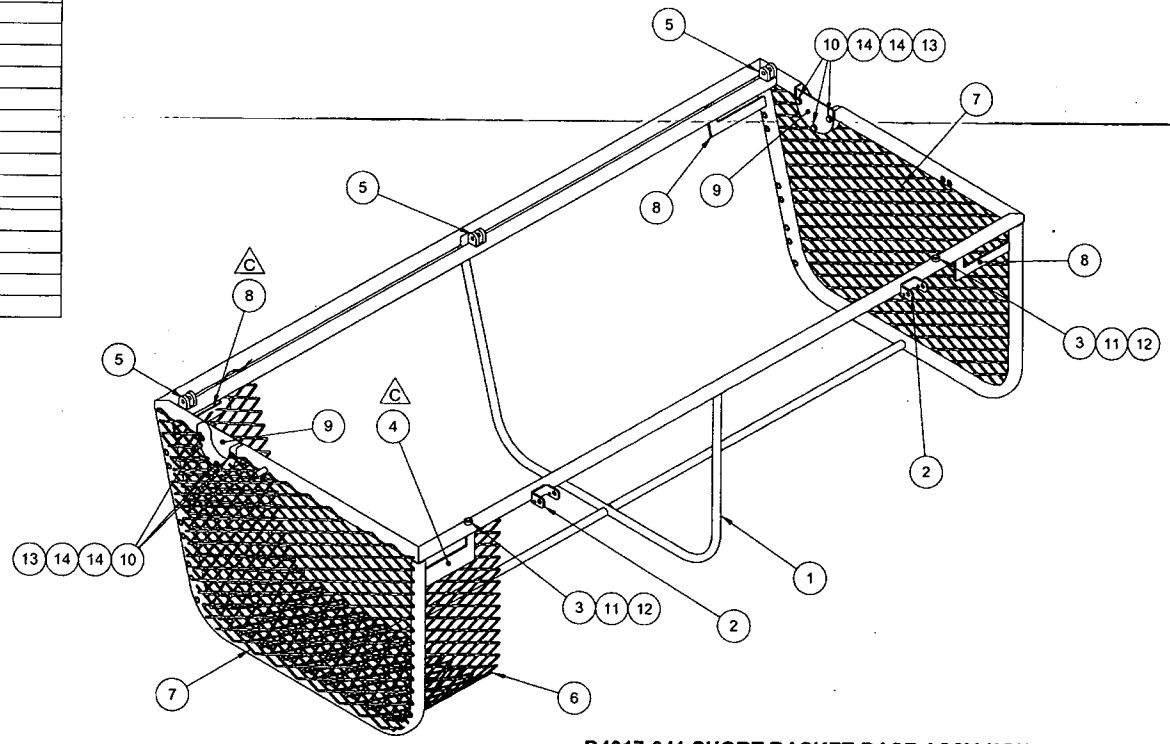

D4017-041 SHORT BASKET BASE ASSY (350)
(MESH SHOWN LOCALLY FOR CLARITY)

SHOP COPY
RETURN TO
ENGINEERING
UNCONTROLLED COPY
SUBJECT TO AMENDMENT
WITHOUT NOTICE
WORK ORDER
NO. 72434
11-07-25

ECN 10-596
RELEASED
10.08.12

NOTES:
1) MATERIAL: N/A
2) FINISH: POWDER COAT WHITE (4.3.5.2) PER DART QSI 005 4.3
3) TOLERANCES: PER DART QSI 018 UNLESS OTHERWISE NOTED
4) UNITS: INCHES UNLESS OTHERWISE NOTED
5) BREAK SHARP EDGES: N/A
6) IDENTIFICATION: NONE
7) WEIGHT: 28.8 lbs APPROX
8) INSTALL AFTER FINISH
9) MASK HOLES PRIOR TO POWDER COAT
10) WELD PER DART QSI 004

REV.	DESCRIPTION	BY	DATE
C	ITEM #4 NOW INSTALLED OUTBOARD (C4-1, C5-1, B5-2 AND D6-2). REASON: ELIMINATE INTERFERENCE PREVENTING INSTALLATION OF RECEIVER ASSEMBLIES.	MB	10.07.23
B	QTY 1 D4021-1 REPLACED WITH QTY 1 D3913-15; AN3-10A BOLT WAS AN3C10A; NAS1149F0332P WASHER WAS NAS1149C0332R; SECTION F-F UPDATED (D6-2); ITEMS RENUMBERED; DETAIL D UPDATED (A4-3)	JPH	10.03.25
A	NEW ISSUE	AJS	10.03.04

DESIGN	AJS	DART AEROSPACE LTD HAWKESBURY, ONTARIO, CANADA
DRAWN		
CHECKED		DRAWING NO. D4017 — REV. C — SHEET 1 OF 5
MFG. APPR.	J.F.S. for JW	
APPROVED		TITLE: SHORT BASKET BASE ASSY (350) — SCALE: NTS
DE APPR.		
DATE	10.07.23	

COPYRIGHT © 2010 BY DART AEROSPACE LTD
THIS DOCUMENT IS PRIVATE AND CONFIDENTIAL AND IS SUPPLIED ON THE EXPRESS CONDITION THAT IT IS NOT TO BE USED FOR ANY PURPOSE OR COPIED OR COMMUNICATED TO ANY OTHER PERSON WITHOUT WRITTEN PERMISSION FROM DART AEROSPACE LTD.

Dart Aerospace Ltd

W/O:		WORK ORDER CHANGES					
DATE	STEP	PROCEDURE CHANGE	By	Date	Qty	Approval Chief Eng / Prod Mgr	Approval QC Inspector

Part No: _____ **PAR #:** _____ **Fault Category:** _____ **NCR:** Yes No **DQA:** _____ **Date:** _____

Resolution: _____ **Disposition:** _____ **QA: N/C Closed:** _____ **Date:** _____

NCR:		WORK ORDER NON-CONFORMANCE (NCR)						
DATE	STEP	Description of NC Section A	Corrective Action Section B			Verification Section C	Approval Chief Eng	Approval QC Inspector
			Initial Chief Eng	Action Description Chief Eng	Sign & Date			

NOTE: Date & initial all entries

H:\fFORMS\Quality Assurance\approved QA\NCRWO RevE

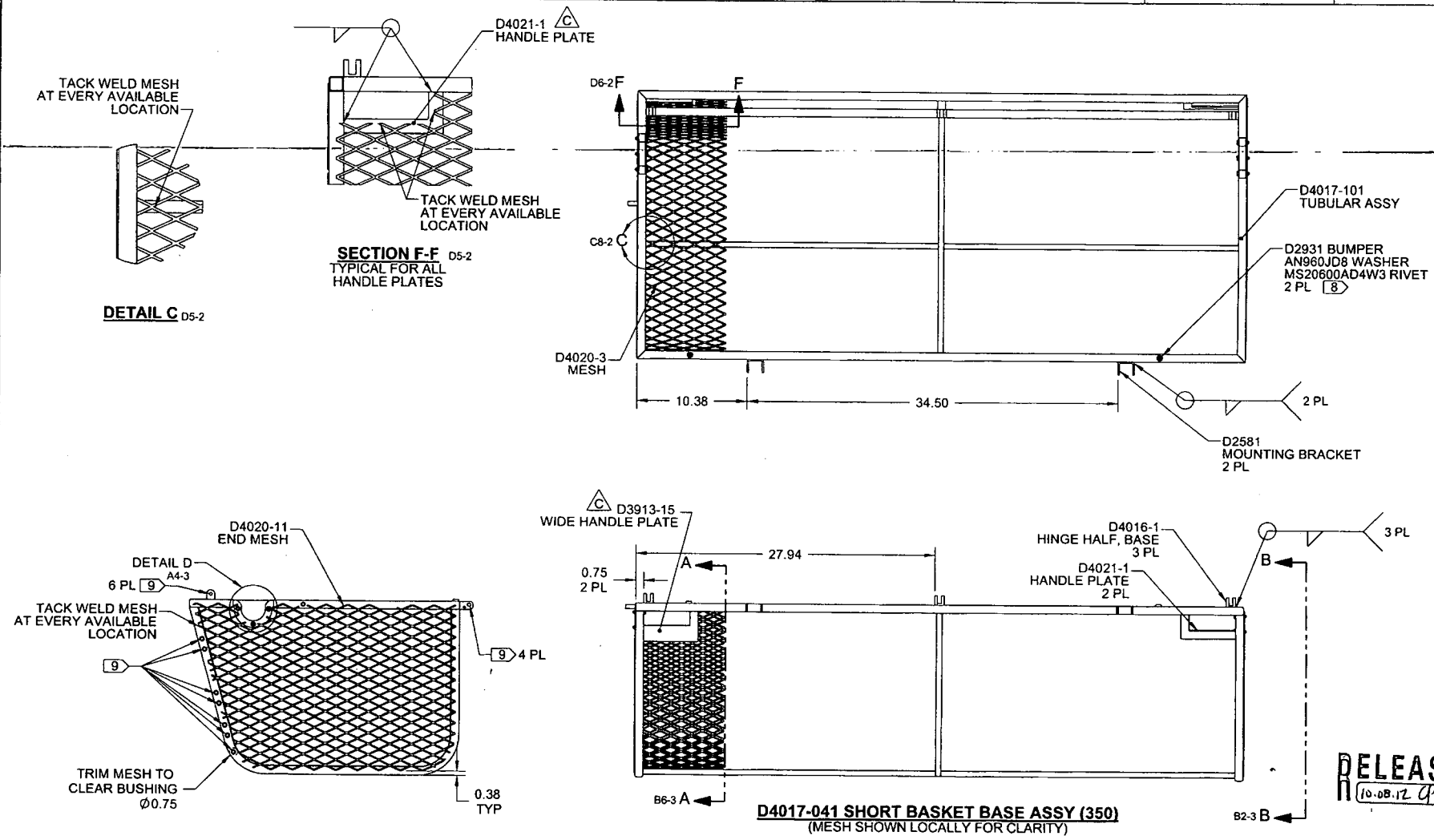

D4017-041 SHORT BASKET BASE ASSY (350)
(MESH SHOWN LOCALLY FOR CLARITY)

RELEASED 10.08.12

72439

DESIGN	AJS	**DART AEROSPACE LTD** HAWKESBURY, ONTARIO, CANADA
DRAWN		
CHECKED		DRAWING NO. D4017 — REV. C — SHEET 2 OF 5
MFG. APPR.	JFS SLM	
APPROVED		TITLE SHORT BASKET BASE ASSY (350) — SCALE NTS.
DE APPR.		
DATE	10.07.23	

COPYRIGHT © 2010 BY DART AEROSPACE LTD
THIS DOCUMENT IS PRIVATE AND CONFIDENTIAL AND IS SUPPLIED ON THE EXPRESS CONDITION THAT IT IS NOT TO BE USED FOR ANY PURPOSE OR COPIED OR COMMUNICATED TO ANY OTHER PERSON WITHOUT WRITTEN PERMISSION FROM DART AEROSPACE LTD.

Dart Aerospace Ltd

W/O:		WORK ORDER CHANGES					
DATE	STEP	PROCEDURE CHANGE	By	Date	Qty	Approval Chief Eng / Prod Mgr	Approval QC Inspector

Part No: _____ **PAR #:** _____ **Fault Category:** _____ **NCR:** Yes No **DQA:** _____ **Date:** _____

Resolution: _____ **Disposition:** _____ **QA: N/C Closed:** _____ **Date:** _____

NCR:		WORK ORDER NON-CONFORMANCE (NCR)						
DATE	STEP	Description of NC Section A	Corrective Action Section B			Verification Section C	Approval Chief Eng	Approval QC Inspector
			Initial Chief Eng	Action Description Chief Eng	Sign & Date			

NOTE: Date & initial all entries

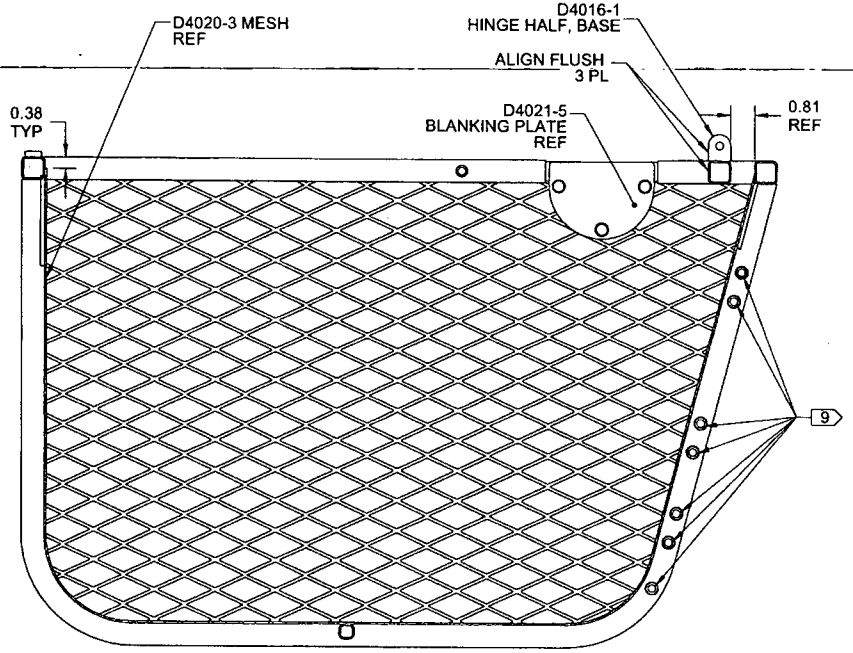

SECTION A-A A5-2

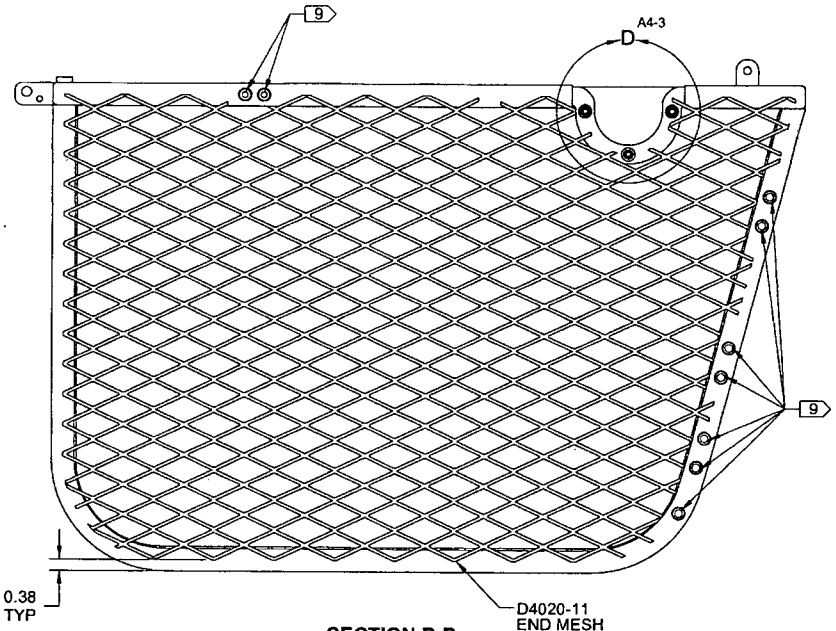

SECTION B-B A2-2

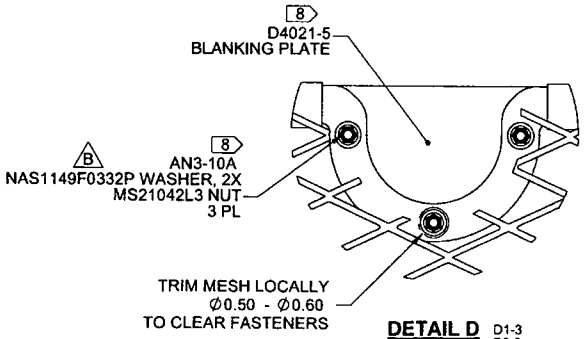

DETAIL D D1-3 B8-2

12434

RELEASED 10.08.12

DESIGN	AJS	**DART AEROSPACE LTD** HAWKESBURY, ONTARIO, CANADA
DRAWN		
CHECKED		DRAWING NO. D4017 — REV. C — SHEET 3 OF 5
MFG. APPR.	J.F.S.	
APPROVED		TITLE: SHORT BASKET BASE ASSY (350) — SCALE: NTS
DE APPR.		
DATE	10.07.23	

COPYRIGHT © 2010 BY DART AEROSPACE LTD
THIS DOCUMENT IS PRIVATE AND CONFIDENTIAL AND IS SUPPLIED ON THE EXPRESS CONDITION THAT IT IS NOT TO BE USED FOR ANY PURPOSE OR COPIED OR COMMUNICATED TO ANY OTHER PERSON WITHOUT WRITTEN PERMISSION FROM DART AEROSPACE LTD.

Dart Aerospace Ltd

W/O:		WORK ORDER CHANGES					
DATE	STEP	PROCEDURE CHANGE	By	Date	Qty	Approval Chief Eng / Prod Mgr	Approval QC Inspector

Part No: _____ **PAR #:** _____ **Fault Category:** _____ **NCR:** Yes No **DQA:** _____ **Date:** _____

Resolution: _____ **Disposition:** _____ **QA: N/C Closed:** _____ **Date:** _____

NCR:		WORK ORDER NON-CONFORMANCE (NCR)						
DATE	STEP	Description of NC Section A	Corrective Action Section B			Verification Section C	Approval Chief Eng	Approval QC Inspector
			Initial Chief Eng	Action Description Chief Eng	Sign & Date			

NOTE: Date & initial all entries

ITEM	QTY -101	P/N	DESCRIPTION
	X	D4017-101	TUBULAR ASSY (350 SHORT BASKET)
1	1	D4017-1	RIB
2	1	D4017-3	RIB
3	1	D4017-5	HINGE RIB
4	1	D4017-7	RIB
5	2	D4017-9	RIB
6	2	D3916-041	RIB ASSY
7	1	D3916-5	LIGHT RIB
8	1	D4034-041	AFT UPPER RIB ASSY
9	1	D4034-043	FWD UPPER RIB ASSY

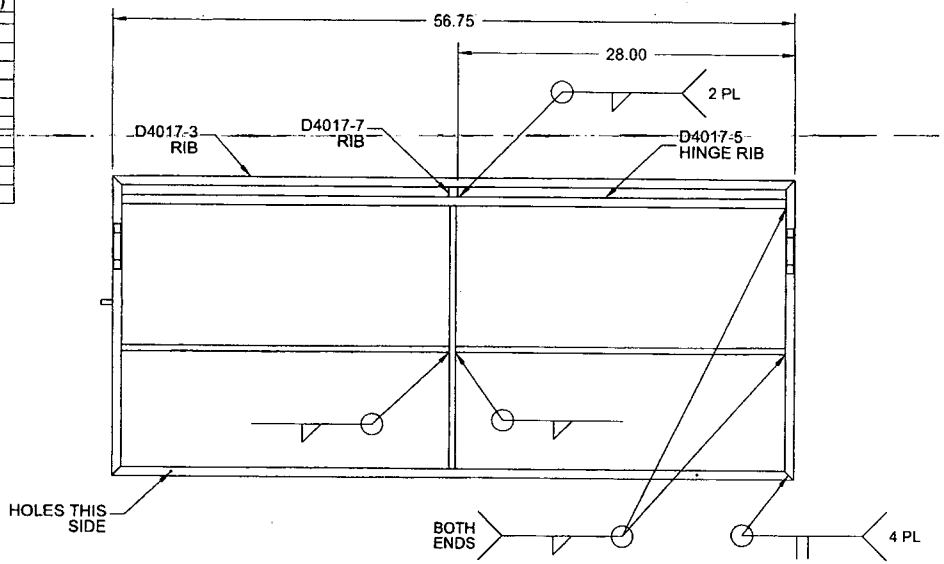

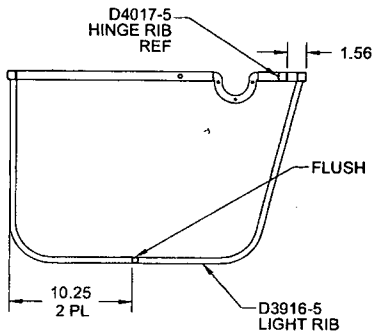

SECTION E-E A4-4

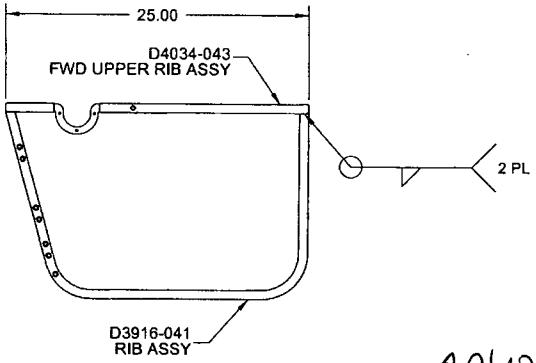

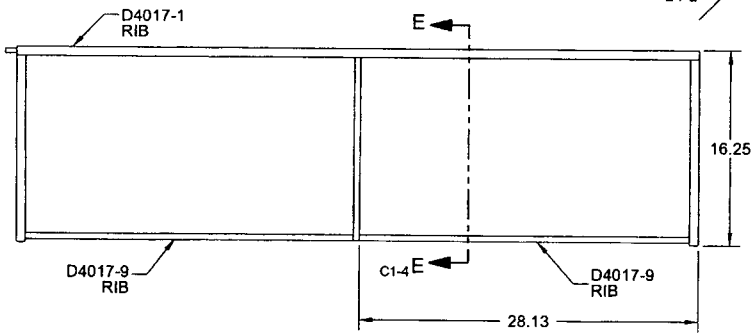

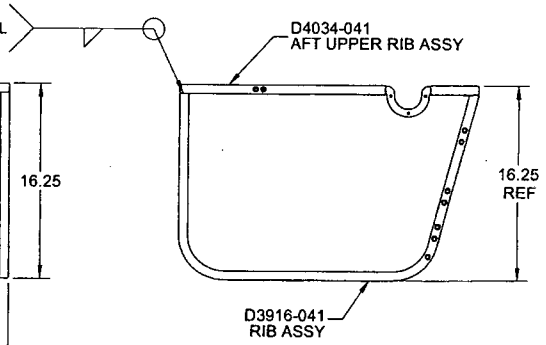

8 D4017-101 TUBULAR ASSY (350 SHORT BASKET)

97434

RELEASED 10.08.17

NOTES:
1) MATERIAL: N/A
2) FINISH: NONE
3) TOLERANCES: PER DART QSI 018 UNLESS OTHERWISE NOTED
4) UNITS: INCHES UNLESS OTHERWISE NOTED
5) BREAK SHARP EDGES: 0.005 TO 0.010 MAX
6) IDENTIFICATION: N/A
7) WEIGHT: 15.26 lbs
8) TOLERANCE FOR XX.XX DIMENSIONS ±0.06 FOR D4017-101
9) WELD PER DART QSI 004

DESIGN	A.J.S
DRAWN	
CHECKED	
MFG. APPR.	S.T.S. for J.L.M
APPROVED	
DE APPR.	
DATE	10.07.23

DART AEROSPACE LTD
HAWKESBURY, ONTARIO, CANADA

DRAWING NO. D4017 REV. C
SHEET 4 OF 5
TITLE SHORT BASKET BASE ASSY (350)
SCALE NTS

COPYRIGHT © 2010 BY DART AEROSPACE LTD
THIS DOCUMENT IS PRIVATE AND CONFIDENTIAL AND IS SUPPLIED ON THE EXPRESS CONDITION THAT IT IS NOT TO BE USED FOR ANY PURPOSE OR COPIED OR COMMUNICATED TO ANY OTHER PERSON WITHOUT WRITTEN PERMISSION FROM DART AEROSPACE LTD.

Dart Aerospace Ltd

W/O:		WORK ORDER CHANGES					
DATE	STEP	PROCEDURE CHANGE	By	Date	Qty	Approval Chief Eng / Prod Mgr	Approval QC Inspector

Part No: _____ **PAR #:** _____ **Fault Category:** _____ **NCR:** Yes No **DQA:** _____ **Date:** _____

Resolution: _____ **Disposition:** _____ **QA: N/C Closed:** _____ **Date:** _____

NCR:		WORK ORDER NON-CONFORMANCE (NCR)						
DATE	STEP	Description of NC Section A	Corrective Action Section B			Verification Section C	Approval Chief Eng	Approval QC Inspector
			Initial Chief Eng	Action Description Chief Eng	Sign & Date			

NOTE: Date & initial all entries

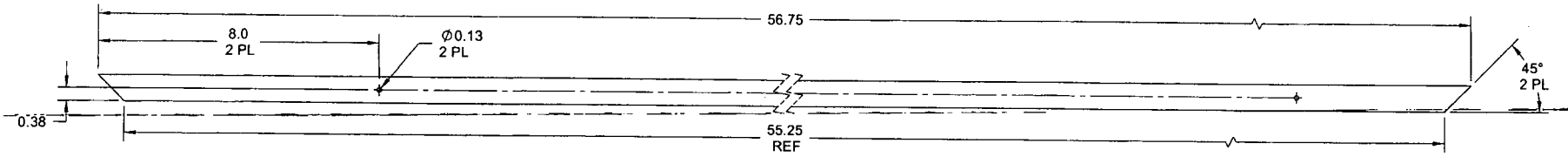

D4017-1 RIB

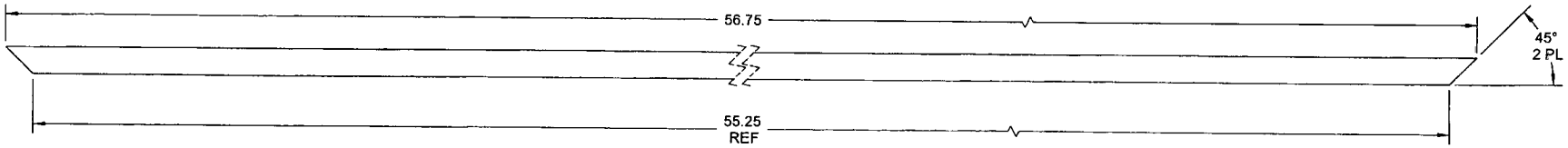

D4017-3 RIB

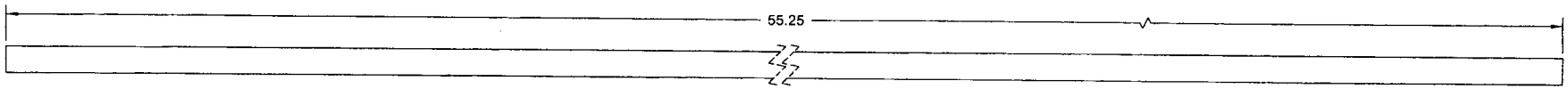

D4017-5 HINGE RIB

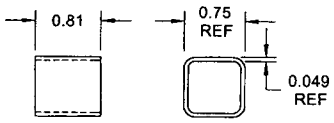

D4017-7 RIB

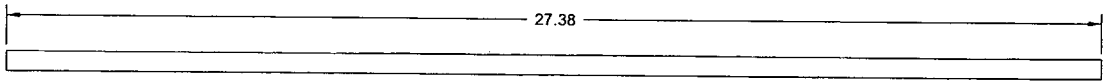

D4017-9 RIB

NOTES:
1) MATERIAL -1 THRU -7: AISI 304/316 STAINLESS STEEL SQUARE TUBE, 0.75 X 0.75 X 0.049 WALL
REF DART SPEC. M304TS0.750W.049

-9: AISI 304/316 STAINLESS STEEL SQUARE TUBE, 0.50 X 0.50 X 0.049 WALL
REF DART SPEC. M304TS0.500W.049

2) FINISH: NONE
3) TOLERANCES: PER DART QSI 018 UNLESS OTHERWISE NOTED
4) UNITS: INCHES UNLESS OTHERWISE NOTED
5) BREAK SHARP EDGES: 0.005 TO 0.010 MAX
6) IDENTIFICATION: N/A
7) WEIGHT: SEE ASSEMBLED WEIGHTS

22B4

RELEASED 10.08.12

DESIGN	AJS	DART AEROSPACE LTD HAWKESBURY, ONTARIO, CANADA
DRAWN		
CHECKED		DRAWING NO. D4017 — REV. C — SHEET 5 OF 5
MFG. APPR.	JFS JLM	
APPROVED		TITLE — SCALE
DE APPR.		SHORT BASKET BASE ASSY (350) — NTS
DATE	10.07.23	

COPYRIGHT © 2010 BY DART AEROSPACE LTD
THIS DOCUMENT IS PRIVATE AND CONFIDENTIAL AND IS SUPPLIED ON THE EXPRESS CONDITION THAT IT IS NOT TO BE USED FOR ANY PURPOSE OR COPIED OR COMMUNICATED TO ANY OTHER PERSON WITHOUT WRITTEN PERMISSION FROM DART AEROSPACE LTD.

Dart Aerospace Ltd

W/O:		WORK ORDER CHANGES					
DATE	STEP	PROCEDURE CHANGE	By	Date	Qty	Approval Chief Eng / Prod Mgr	Approval QC Inspector

Part No: _____ **PAR #:** _____ **Fault Category:** _____ **NCR:** Yes No **DQA:** _____ **Date:** _____

Resolution: _____ **Disposition:** _____ **QA: N/C Closed:** _____ **Date:** _____

NCR:		WORK ORDER NON-CONFORMANCE (NCR)						
DATE	STEP	Description of NC Section A	Corrective Action Section B			Verification Section C	Approval Chief Eng	Approval QC Inspector
			Initial Chief Eng	Action Description Chief Eng	Sign & Date			

NOTE: Date & initial all entries